COSMIC SERIES

HERO

Operation, Maintenance and Service Manual

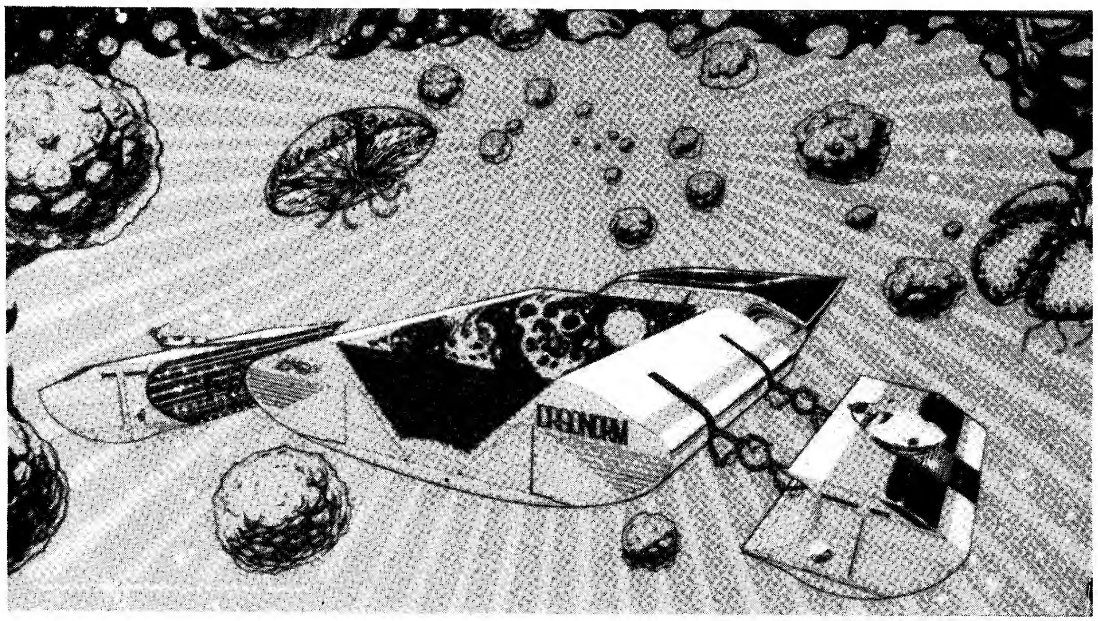

UNIVERSAL

CONTENTS

I. **Features of this machine** 1
II. **How to handle and maintain this machine.** 2
III. **How to play** 3
IV. **Various optional settings** 4
A. Positions of dip switches 4
B. Setting the option (dip switches) 4
C. Volume controller knob 5
V. **TV monitor** 5
A. Adjustment of TV picture screen 5
VI. **Upright type parts catalog** 6
A. Component parts related to cabinet (outside) 6
B. Drawing of circuit board mounting positions 7
C. Fuses 7
D. Component parts related to cabinet (inside) 8
a) Operating panel assembly 8
b) Door assembly and parts list 9
c) Lever assembly and part list 10
E. Component parts related to switches and lamps in the cabinet 11
VII. **Table type parts catalog** 12
A. Component parts related to cabinet (outside) 12
B. Component parts related to cabinet (inside) 13
a) Inside cabinet 13
b) Fuses 14
c) Operating panel assembly 14
VIII. **Circuit board** 15
A. Circuit board IC location and parts list 15
a) Main circuit board IC location and parts list 15
b) Sub-circuit board IC location and parts list 16
c) Sound circuit board IC location and parts list 17
d) Sound sub-circuit board IC location and parts list 18
Wiring diagram (connector) 19
Sound block diagram 20
Power source block diagram 20
Block diagram 20
Schematic diagram (20" color) 21
Schematic diagram (14" color) 22
Main block diagram 23, 24
Postface 25

REFERENCE DRAWING

Fig. 1 Positions of Dip Switches 4
Fig. 2 Positions of Volume Controller Knob 5
Fig. 3 Positions of TV Monitor Controller Knobs 5
Fig. 4 Component Parts Related to Cabinet (Outside) 6
Fig. 5 Circuit Board Mounting Positions 7
Fig. 6 Side View of Circuit Board Mounting Positions 7
Fig. 7 Position of Sound Sub-circuit Board 7
Fig. 8 Fuses 7
Fig. 9 Component Parts Related to Cabinet (Inside) 8
Fig. 10 Operating Panel Assembly 8
Fig. 11 Inside View of Door Assembly 9
Fig. 12 Lever Assembly 10
Fig. 13 Component Parts Related to Switches in the Cabinet 11
Fig. 14 Component Parts Related to Cabinet (Outside) 12
Fig. 15 Component Parts Related to Cabinet (Inside) 13
Fig. 16 Fuses in the Power Source Unit 14
Fig. 17 Fuses in the Power Circuit Board 14
Fig. 18 Operating Panel Assembly 14
Fig. 19 Main Circuit Board 15
Fig. 20 Sub-circuit Board 16
Fig. 21 Sound Circuit Board 17
Fig. 22 Sound Sub-circuit Board 18

— WHEN ORDERING PARTS —

Since each component part is indicated by block, definitely specify both the corresponding Fig. No. and part No. within the Fig. when placing an order for it.

I. FEATURES OF THIS MACHINE

1. The game packs in excellent features capturing the hearts of players.
2. The lever control system is simple to handle.
3. At the flick of a dip switch, you can select among extended play, the number of tanks and time of appearance of an additional tank, etc.
4. High score for the day is always displayed on the screen.
5. Finely designed cabinet and fascinating acoustic effects.

II. HOW TO HANDLE AND MAINTAIN THIS MACHINE

1. Since the UNIVERSAL's ZERO HOUR employs a color TV receiving set, be careful not to shake it during transit and when carrying it about.

2. Install it at a location which is not exposed to direct sunlight. In order to prevent the inside temperature rising, avoid as much as possible a location near a heater, etc.

3. Since the grounding terminal is visible, be sure to connect it to a grounding conductor.

4. Insert the power cord into the outlet and turn on the switch.

5. Even if the solid-state module seems to be out of order, do not check the circuit by means of a circuit tester, etc., since the internal voltage of the tester, etc. may sometimes break down the IC.

6. Make sure the machine is well ventiated. If the temperature of the IC and transistor is lower than 60°C, the function normally and may be considered reliable. If it exceeds 60°C, their performance cannot be guaranteed.

7. Make sure that the connector, etc. is not disconnected.

8. Whenever connecting the power cord of the solid-state module to, or disconnecting it from, the outlet, be sure to turn the power off.

9. Although the products of UNIVERSAL are manufactured with the utmost care, they may develop malfunctions when used for long periods. So, be sure to chek this machine daily.

III. HOW TO PLAY

1. Spaceship "ZERO" can be manoeuvred in 8 directions by working the lever – distroy the meteorites by using the magazine space gun.

2. Shooting down a red meteorite awards a double score.

3. If you hit the enemy spaceship while dodging the flickering barrier, 3 enemy spaceships will counterattach launching missiles. After destroying all of then, the next barrier is removed and 3 other enemy spaceships will appear. Thus, a total of 9 enemy spaceships appear, attacking one after the another.

4. When you have shot down the 9 assaulting spaceships, a launching pad will appear below. So, carefully land your spaceship on the pad by working the lever. When pushing the FIRE button at this time, your spaceship can be raised. If you succeed in landing, you are awarded additional bonus points which are displayed on the screen.

5. The number of cleared screens is displayed by green star(s) on the lower right side. From the 10th screen on, the stars redden.

SCORE

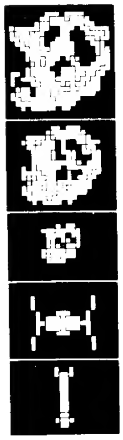

Meteorite (large)	5 PTS
Meteorite (middle)	10 PTS
Meteorite (small)	15 PTS
Enemy spaceship	20 PTS
Enemy missile	3 PTS

IV. VARIOUS OPTIONAL SETTINGS

A. POSITIONS OF DIP SWITCHES

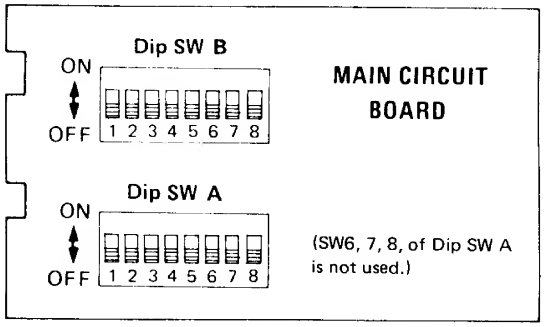

Fig. 1 Positions of Dip Switches

B. SETTING THE OPTION (DIP SWITCHES)

[Dip Switches A]

1. Setting the number of SPACESHIPS for game (SW1, 2)

Number of SPACESHIPS	SW1	SW2
2 Ships	ON	ON
3 Ships	OFF	OFF
4 Ships	OFF	ON
5 Ships	ON	OFF

2. Setting the required score for an additional SPACESHIP (SW3, 4)

Score for Extra	SW3	SW4
Over 5,000 pts	OFF	OFF
Over 8,000 pts	OFF	ON
Over 10,000 pts	ON	OFF
No extra	ON	ON

3. Change-over setting of the mode of game (SW5)

Sytle	SW5
Table	OFF
Upright	ON

4. SW6, 7, 8, of SW A is not used.

[Dig Switches B]

1. Setting the game charge (Coin & Credit)

a. Right chute (SW1, 2, 3, 4)

Coin	Credit	SW5	SW6	SW7	SW8
1	1	OFF	OFF	OFF	OFF
1	2	OFF	OFF	OFF	ON
1	3	OFF	OFF	ON	OFF
1	4	OFF	OFF	ON	ON
1	5	OFF	ON	OFF	OFF
2	1	OFF	ON	OFF	ON
2	3	OFF	ON	ON	OFF
3	1	OFF	ON	ON	ON
3	2	ON	OFF	OFF	OFF
4	1	ON	OFF	OFF	ON
1	1	ON	OFF	ON	OFF
1	1	ON	OFF	ON	ON
1	1	ON	ON	OFF	OFF
1	1	ON	ON	OFF	ON
1	1	ON	ON	ON	OFF
1	1	ON	ON	ON	ON

b. Left chute (SW5, 6, 7, 8)

Coin	Credit	SW5	SW6	SW7	SW8
1	1	OFF	OFF	OFF	OFF
1	2	OFF	OFF	OFF	ON
1	3	OFF	OFF	ON	OFF
1	4	OFF	OFF	ON	ON
1	5	OFF	ON	OFF	OFF
2	1	OFF	ON	OFF	ON
2	3	OFF	ON	ON	OFF
3	1	OFF	ON	ON	ON
3	2	ON	OFF	OFF	OFF
4	1	ON	OFF	OFF	ON
1	1	ON	OFF	ON	OFF
1	1	ON	OFF	ON	ON
1	1	ON	ON	OFF	OFF
1	1	ON	ON	OFF	ON
1	1	ON	ON	ON	OFF
1	1	ON	ON	ON	ON

C. VOLUME CONTROLLER KNOB

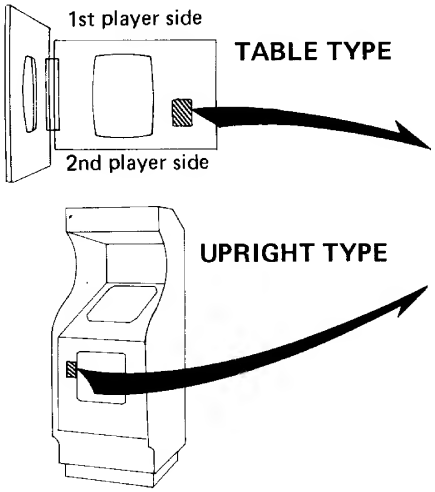

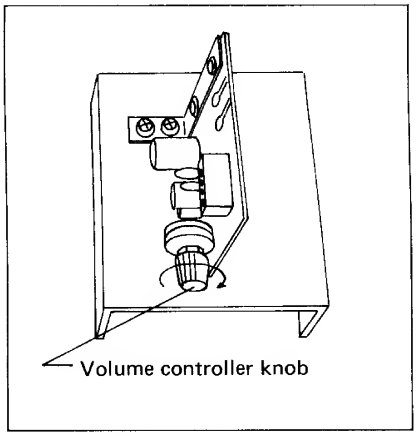

Fig. 2 Positions of Volume Controller Knob

V. TV MONITOR

A. ADJUSTMENT OF TV PICTURE SCREEN

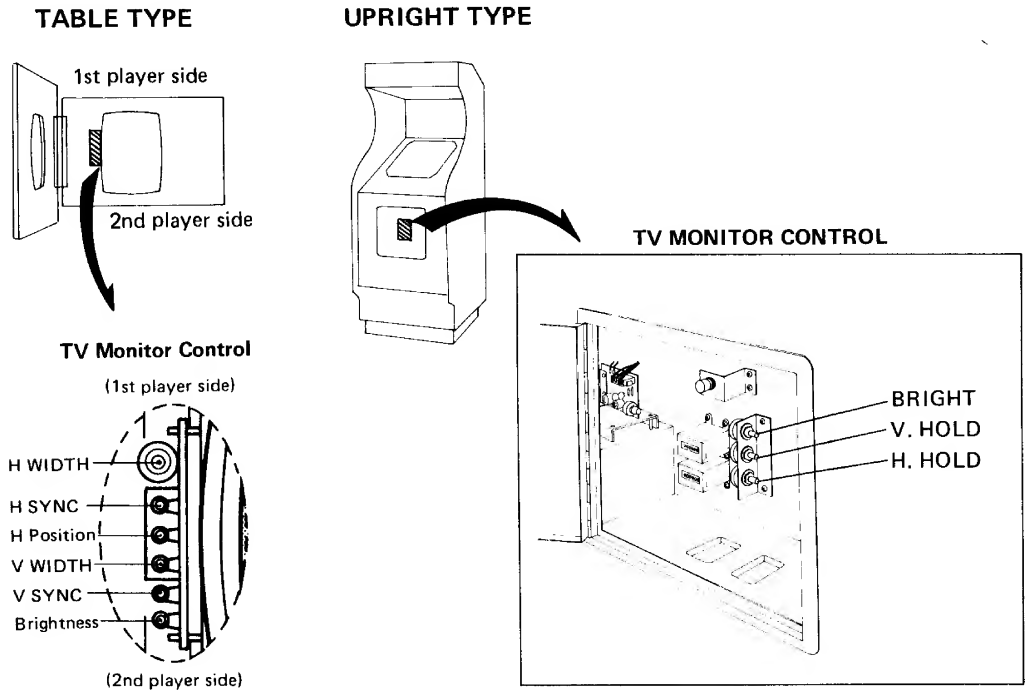

Fig. 3 Positions of TV Monitor Controller Knobs

UPRIGHT TYPE

This documentation provides standard information.
Universal reserves the right to change without notice.

VI. UPRIGHT TYPE PARTS CATALOG

A. COMPONENT PARTS RELATED TO CABINET (OUTSIDE)

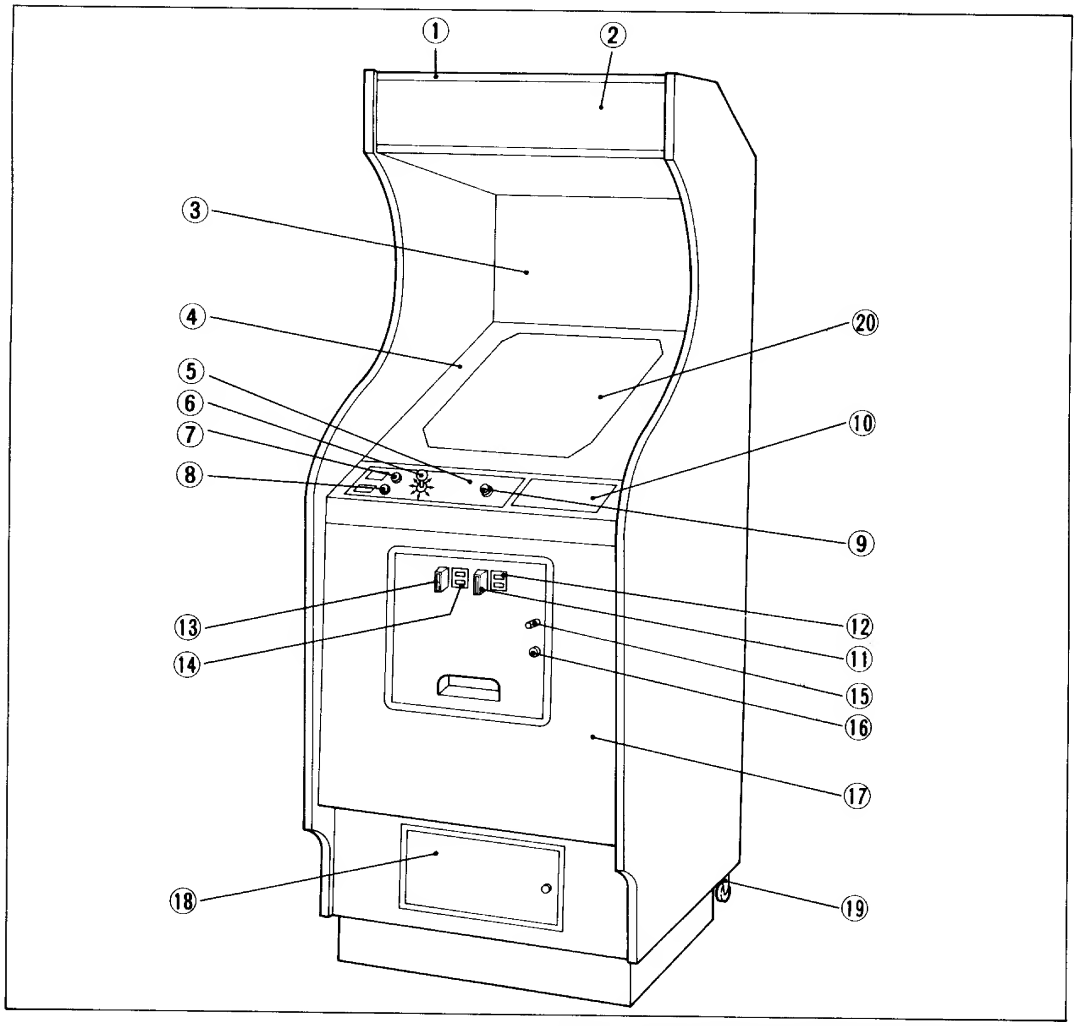

Fig. 4 Component Parts Related to Cabinet (Outside)

OUTSIDE CABINET PARTS LIST

Ref. No.	Name	Ref. No.	Name
1	Title panel fixture	11	Coin slot (1)
2	Title panel	12	Coin indication panel (1)
3	Illustrated glass (B)	13	Coin slot (2)
4	Illustrated glass (A)	14	Coin indication panel (2)
5	Operating indication panel	15	Cancel button
6	Control lever (general name)	16	Door key
7	Push button (for 1 player)	17	Main door
8	Push button (for 2 players)	18	Cash box door
9	Push button (Fire)	19	Caster
10	Sticker for game rules	20	CRT (20" color)

B. DRAWING OF CIRCUIT BOARD MOUNTING POSITIONS

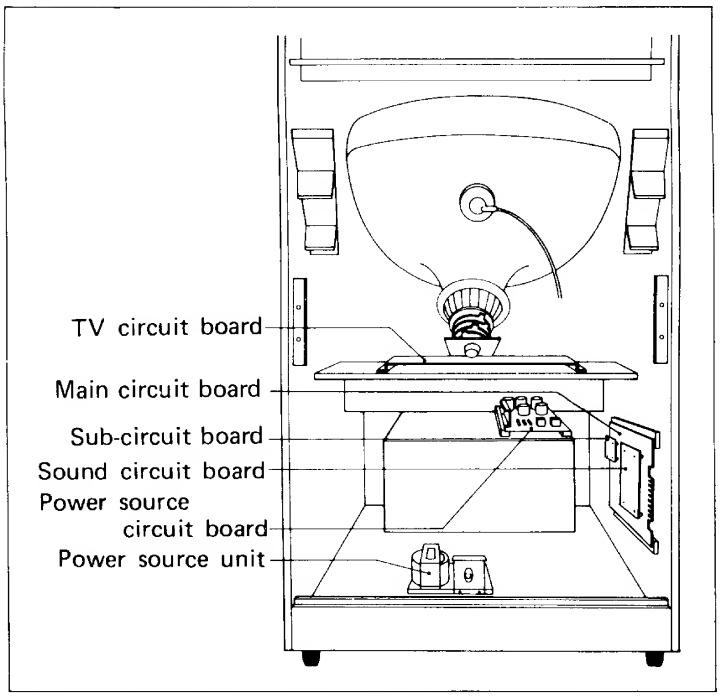

Fig. 5 Circuit Board Mounting Positions

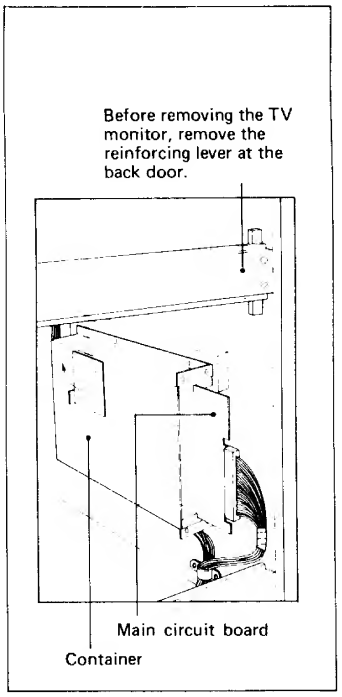

Fig. 6 Side View of Circuit Board Mounting Positions

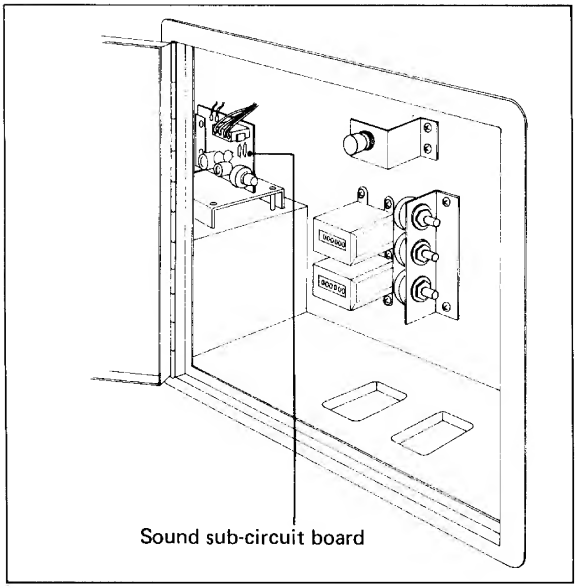

Fig. 7 Position of Sound Sub-circuit Board

C. FUSES

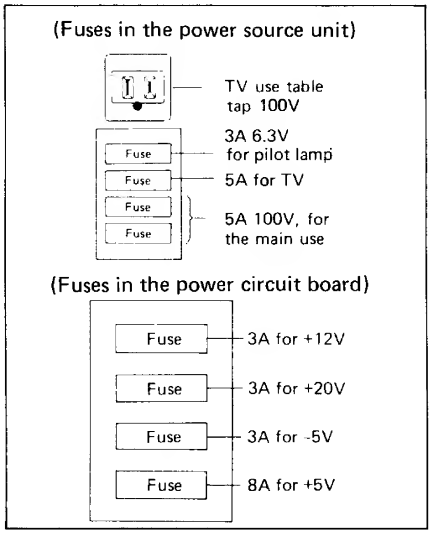

Fig. 8 Fuses

D. COMPONENT PARTS RELATED TO CABINET (INSIDE)

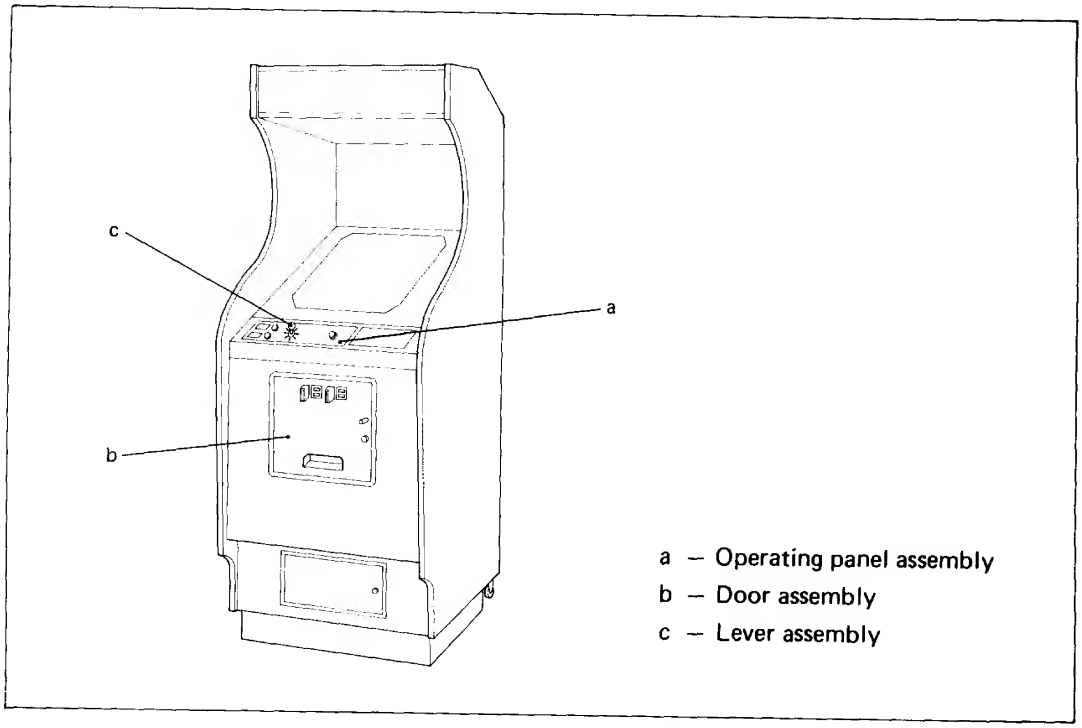

Fig. 9 Component Parts Related to Cabinet (Inside)

a) Operating panel assembly

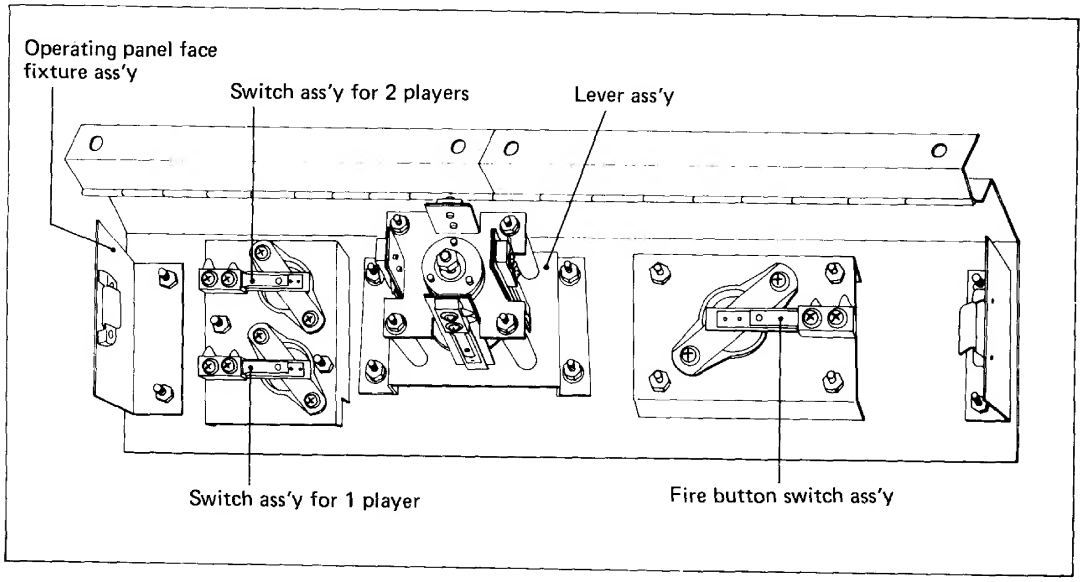

Fig. 10 Operating Panel Assembly

b) Door assembly and parts list

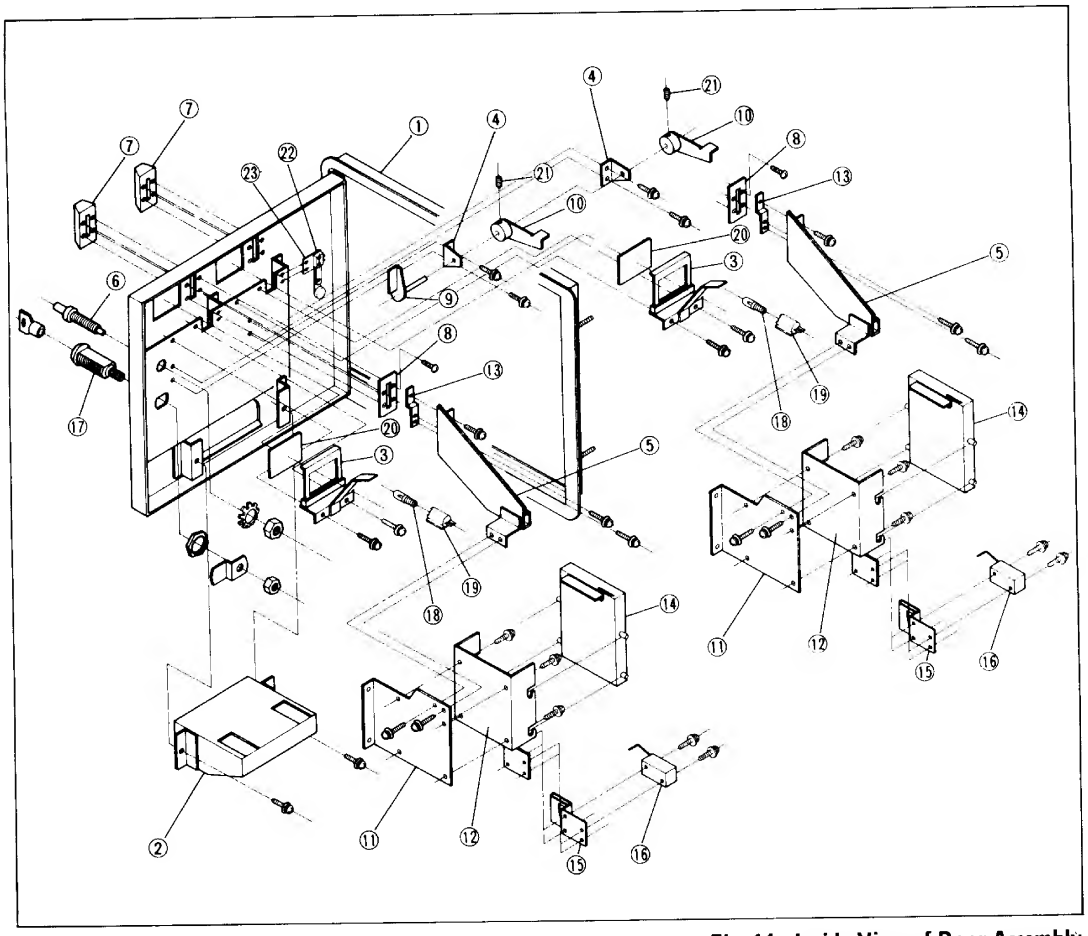

Fig. 11 Inside View of Door Assembly

DOOR ASSEMBLY PARTS LIST

Ref. No.	Name	Ref. No.	Name
1	Main door	13	Coin slot shute holder
2	Returning soucer	14	Rejector
3	Lamp & plastic plate bracket	15	Sensor slot
4	Rearing	16	Micro switch
5	Coin slot shute	17	Key sets
6	Returning button	18	Miniature lamp
7	Coin slot	19	Miniature lamp socket
8	Slot plate	20	Coin indication panel
9	Transmission shaft	21	Hexagon socket head screw
10	Rotary bracket	22	Slam switch
11	Rejector bracket	23	Slam switch holder
12	Rejector case		

c) Lever assembly and parts list

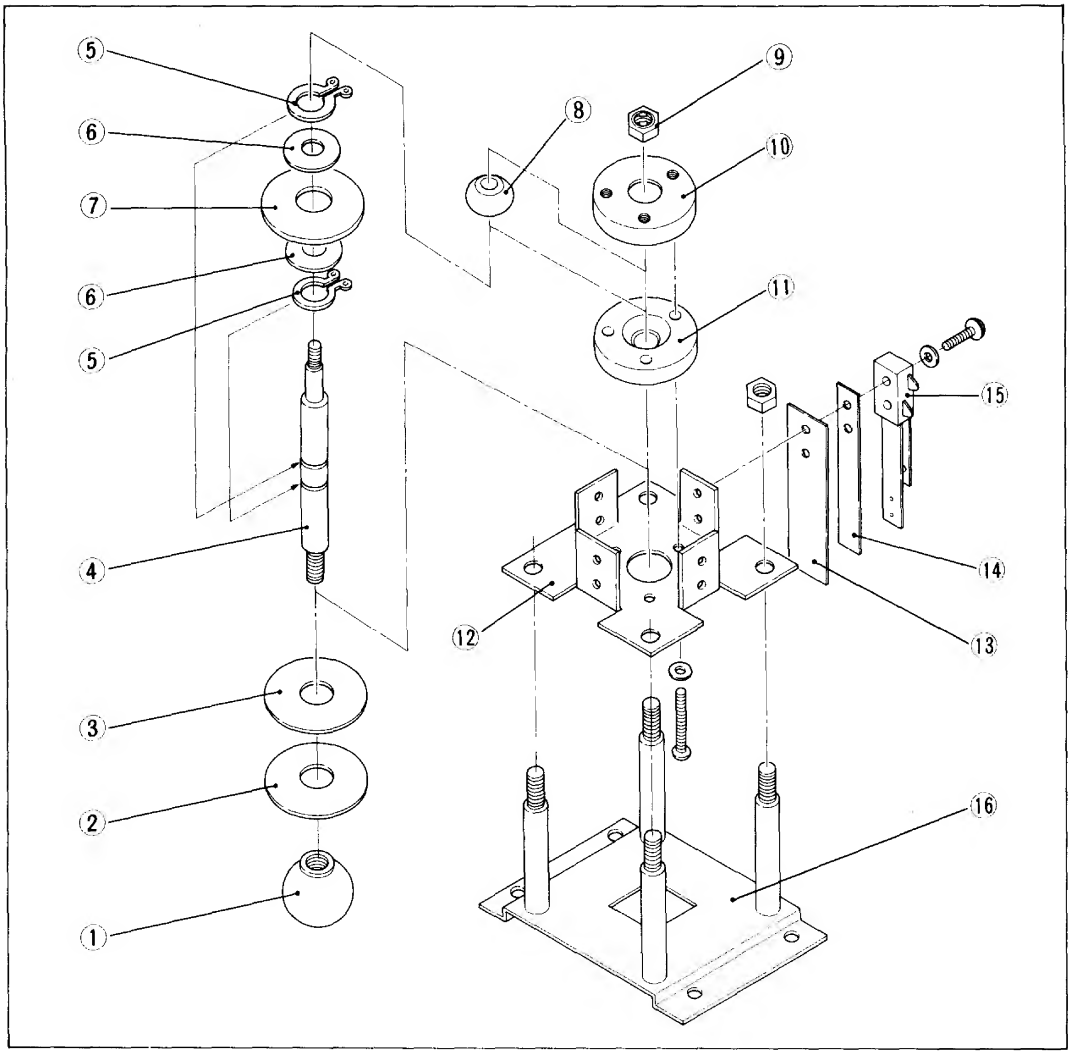

Fig. 12 Lever Assembly

LEVER ASSEMBLY PARTS LIST

Ref. No.	Name	Ref. No.	Name
1	Knob (upright 32Dim., Table 24Dim.)	9	Rock nut
2	Resin board (transparent)	10	Bracket (A)
3	Resin board (Black)	11	Bracket (B)
4	Lever shaft	12	Blades mounting plate
5	Returning rings (C type)	13	Plate spring
6	Flat washer	14	Insulating fiber
7	Detecting dise	15	Blades switch
8	Steel ball	16	Mounting base

E. COMPONENT PARTS RELATED TO SWITCHES IN THE CABINET

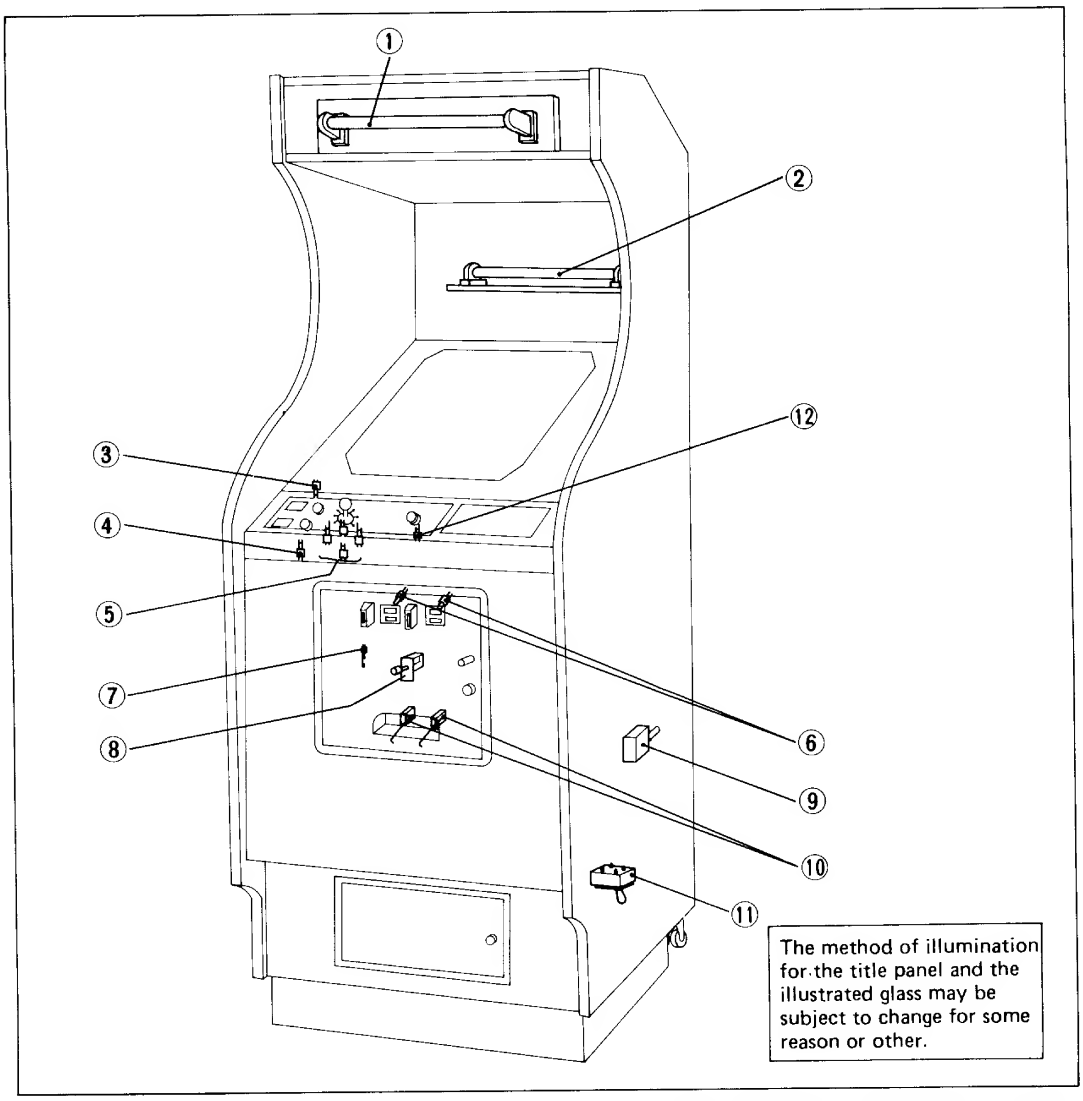

Fig. 13 Component Parts Related to Switches in the Cabinet

INSIDE CABINET PARTS LIST

Ref. No.	Name	Ref. No.	Name
1	Fluorescent lamp for title panel	7	Blades SW for tilt SW
2	Fluorescent lamp for illustrated glass	8	Micro SW for resetting
3	1-player select button blade SW	9	Door SW
4	2-players select button blade SW	10	Micro SW for rejector x 2
5	Control lever 8-directional use blades SW x 4	11	Toggle SW
		12	Blade SW for Fire
6	Miniature lamp for money display x 2		

TABLE TYPE

This documentation provides standard information.
Universal reserves the right to change without notice.

VII. TABLE TYPE PARTS CATALOG

A. COMPONENT PARTS RELATED TO CABINET (OUTSIDE)

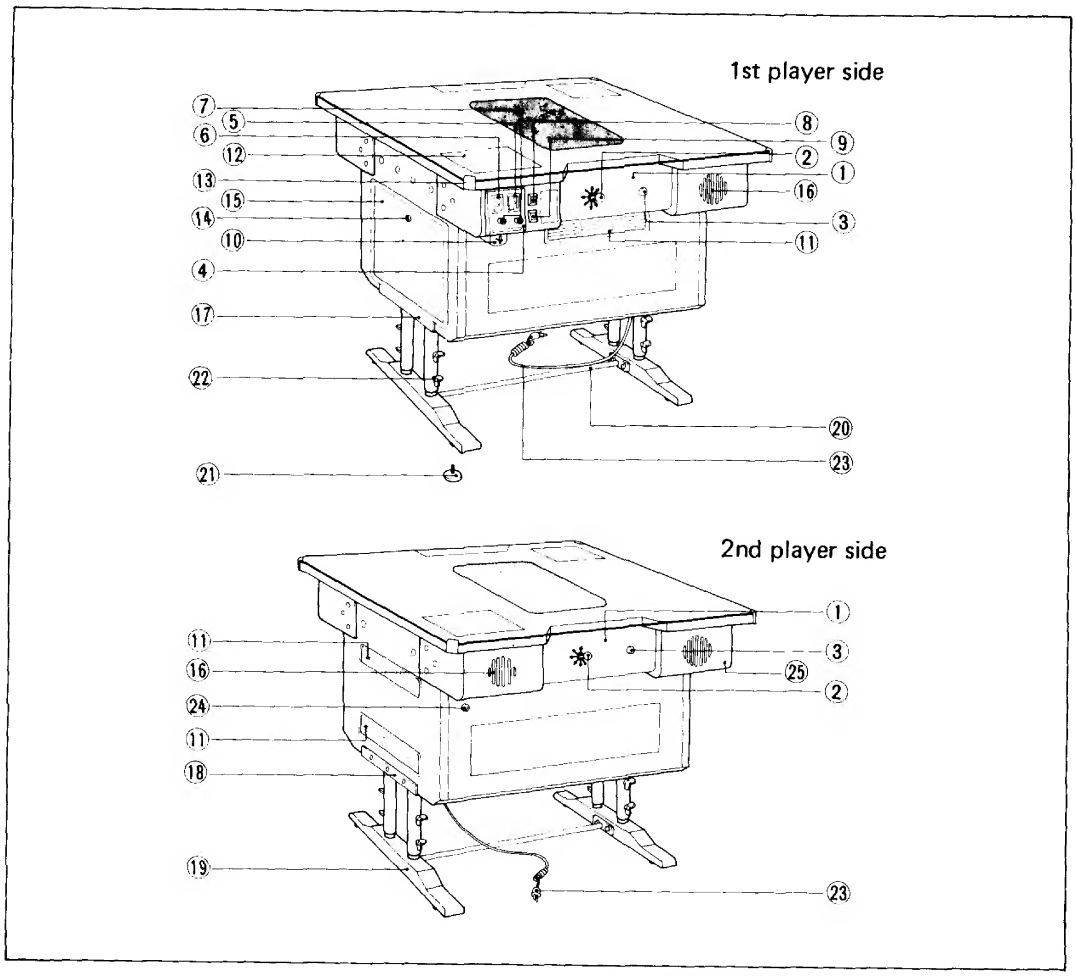

Fig. 14 Component Parts Related to Cabinet (Outside)

OUTSIDE CABINET PARTS LIST

Ref. No.	Name	Ref. No.	Name
1	Operating indication illustrated panel	14	Cash box door key
2	Control lever	15	Cash box door
3	FIRE button	16	Speaker (x2)
4	Coin slot frame	17	Leg (left)
5	Selector plate (1)	18	Leg (right)
6	Selector plate (2)	19	Foot
7	Cancel button	20	Foot support
8	Push button ass'y (for 1 player)	21	Leg adjuster
9	Push button ass'y (for 2 players)	22	Thumbscrew (x8)
10	Cancel coin receptacle	23	Power cord (AC)
11	Ventilating panel (x3)	24	Door key
12	Sticker for game rules (x2)	25	Cabinet corner box
13	Glass fittings		

B. COMPONENT PARTS RELATED TO CABINET (INSIDE)

a) Inside cabinet

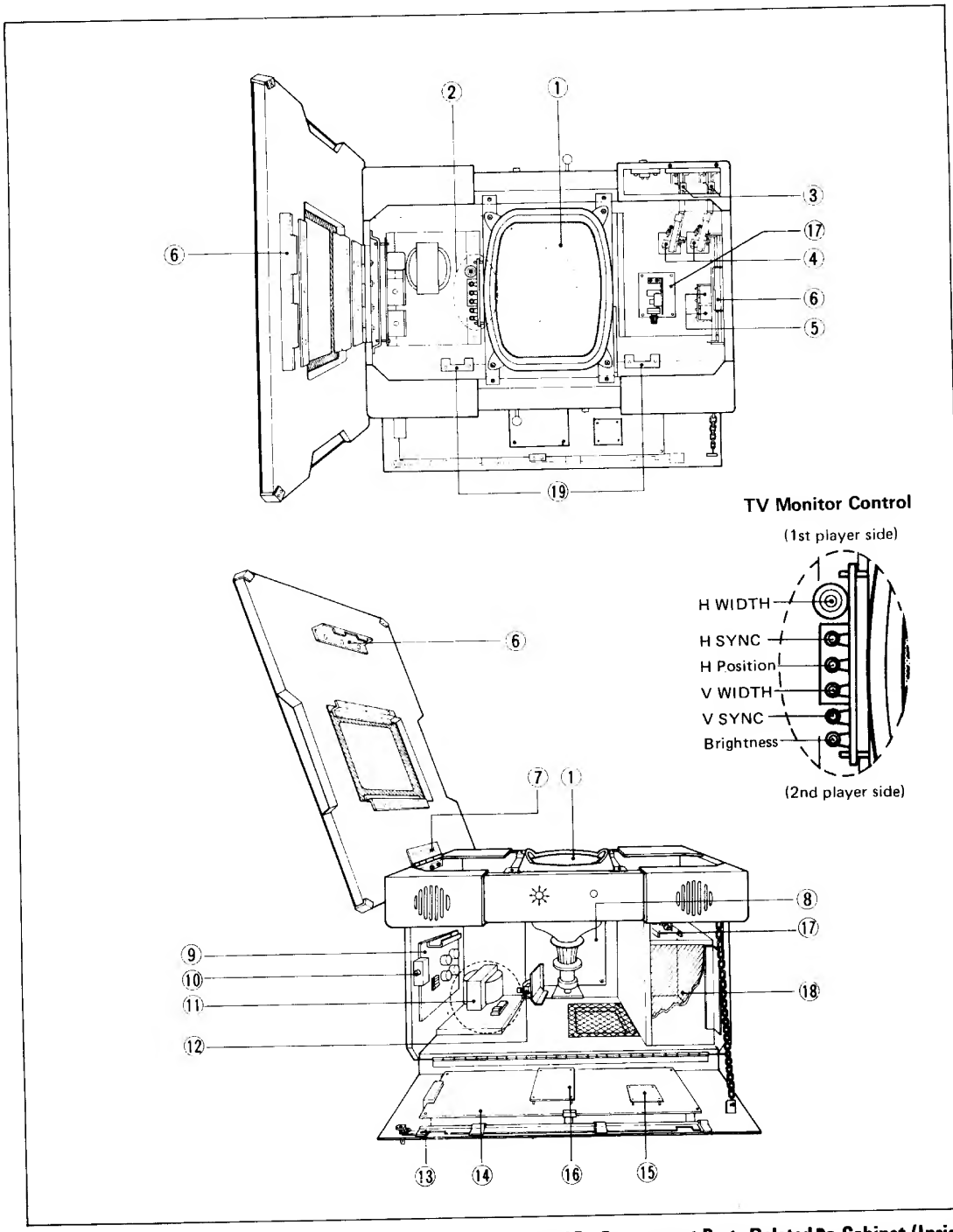

Fig. 15 Component Parts Related to Cabinet (Inside)

INSIDE CABINET PARTS LIST

Ref. No.	Name	Ref. No.	Name
1	CRT (14" color)	11	Power source unit
2	TV monitor control	12	Demagnetization switch
3	Rejector ass'y	13	Door lock ass'y
4	Coin micro switch	14	Main circuit board
5	Coin counter	15	Sub-circuit board
6	Table lock mechanism ass'y	16	Sound circuit board
7	Butterfly plate ass'y	17	Sound sub-circuit board
8	TV monitor circuit board	18	Cash box
9	Power source circuit board	19	Metal door fixture
10	Door switch		

b) Fuses

Fuses in the power source unit

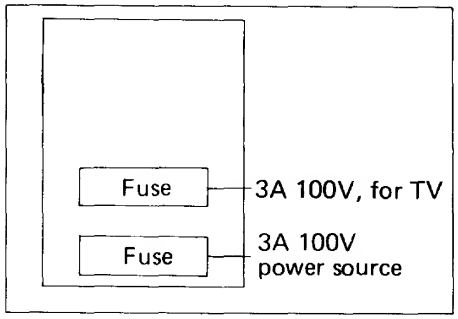

Fig. 16 Fuses in the Power Source Unit

Fuses in the power circuit board

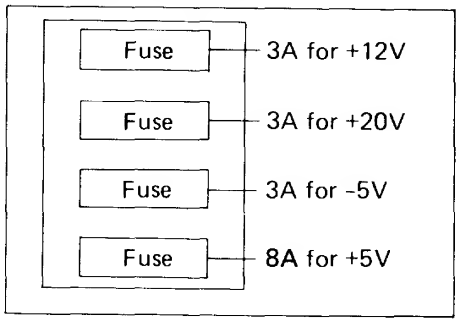

Fig. 17 Fuses in the Power Circuit Board

c) Operating panel assembly

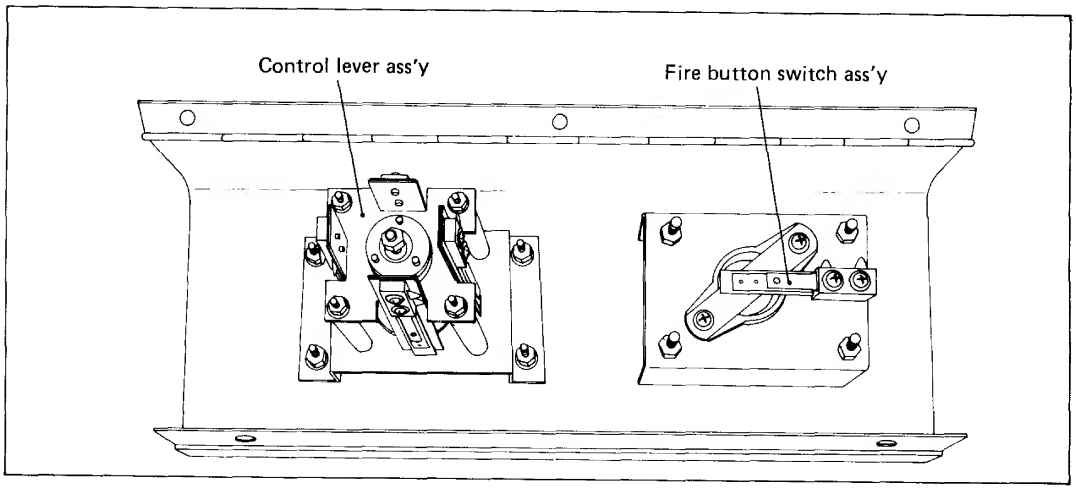

Fig. 18 Operating Panel Assembly

VIII. CIRCUIT BOARD

A. CIRCUIT BOARD IC LOCATION AND PARTS LIST

a) Main circuit board IC location and parts list

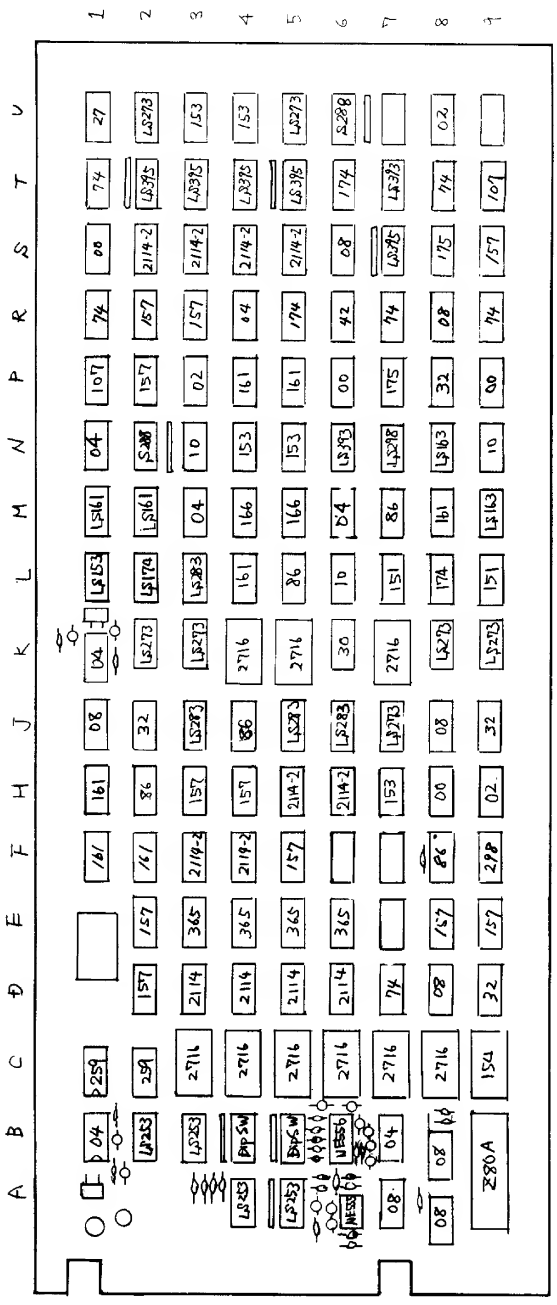

Fig. 19 Main Circuit Board

[1] Integrated Circuit

Item No.	Q'ty	Description
7400N	4	Transistor Logic
7402N	3	"
7404N	7	"
7408N	8	"
7410N	3	"
7427N	1	"
7430N	1	"
7432N	4	"
7442N	1	"
7474N	6	"
7486N	5	"
74107N	2	"
74151N	2	"
74153N	5	"
74154N	1	"
74157N	11	"
74161N	7	"
74166N	2	"
74174N	3	"
74175N	2	"
74259N	2	"
74298N	1	"
74365N	4	"
74LS153N	1	"
74LS161N	2	"
74LS163N	2	"
74LS174N	1	"
74LS253N	4	"
74LS273N	7	"
74LS298N	1	"
74LS393N	2	"
74LS395N	5	"
74S288	2	256 bits Bipolar ROM
Z80A	1	Nch MOS CPU
2716	9	Nch MOS 16K bits EP ROM
2114	4	Nch MOS 4K bits Static RAM
2114-2	8	Nch MOS 4K bits Static RAM
NE555	1	Transistor Logic
NE556	1	"

[2] Other Semiconductor Devices

Item No.	Q'ty	Description
10D1	6	Diode

[3] Capacitors

Rating	Q'ty	Description
100PF/12V	2	Ceramic Capacitor
0.01μF/12V	5	"
0.1μF/12V	43	"
1μF/50V	2	Chemical Capacitor
4.7μF/16V	1	"
10μF/16V	1	"
100μF/16V	2	"

[4] Resistors

Rating	Q'ty	Description
47Ω 1/4W	4	Carbon Solid Resistors
330Ω "	1	"
510Ω "	4	"
1KΩ "	8	"
4.7KΩ "	1	"
47KΩ "	3	"
MS1028AM	6	1KΩ Resistors Array
MS1038AM	2	10KΩ "

[5] Misc

Name	Q'ty	Description
Dip SW	2	8 Elements Switch Array
X'-tal	2	9.828MHz, 4,000MHz

b) Sub-circuit board IC location and parts list

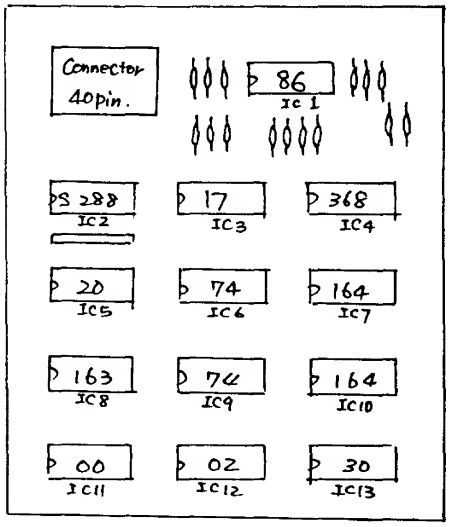

Fig. 20 Sub-circuit Board

[1] Integrated Circuit

Item No.	Q'ty	Description
7400N	1	Transistor Logic
7402N	1	"
7417N	1	"
7420N	1	"
7430N	1	"
7474N	2	"
7486N	1	"
74163N	1	"
74164N	2	"
74365N	1	"
74S288N	1	256 bits Bipolar ROM

[2] Capacitors

Rating	Q'ty	Description
0.1μF/12V	5	Ceramic Capacitor
100PF/12V	1	"

[3] Resistors

Rating	Q'ty	Description
10Ω 1/4W	3	Carbon Solid Resistor
100Ω "	3	"
150Ω "	3	"
220Ω "	3	"
270Ω "	3	"
MS1028AM	1	1KΩ Resistor Array

c) Sound circuit board IC location and parts list

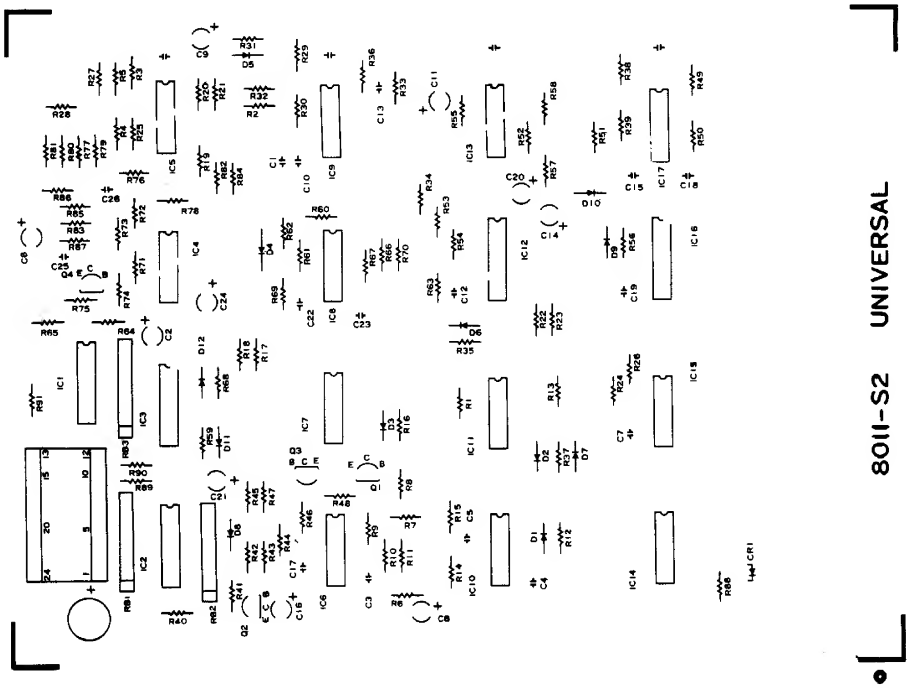

Fig. 21 Sound Circuit Board

Location	Rating	Description
R1	100K	Carbon Solid Resistor
2	100K	"
3	100K	"
4	470K	"
5	470K	"
6	1M	"
7	470K	"
8	51K	"
9	1M	"
10	470K	"
11	1M	"
12	100K	"
13	100K	"
14	100K	"
15	100K	"
16	150K	"
17	51K	"
18	100K	"
19	33K	"
20	10K	"
21	10K	"
22	100K	"
23	100K	"
24	100K	"
25	100K	"
26	200K	"
27	200K	"
28	200K	"
29	1K	"
30	100K	"

Location	Rating	Description
R31	2.2M	Carbon Solid Resistor
32	1K	"
33	10K	"
34	100K	"
35	10K	"
36	100K	"
37	1M	"
38	1K	"
39	100K	"
40	470Ω	"
41	10K	"
42	470K	"
43	1M	"
44	470K	"
45	51K	"
46	470K	"
47	1M	"
48	1M	"
49	1K	"
50	100K	"
51	100K	"
52	100K	"
53	10K	"
54	10K	"
55	10K	"
56	1M	"
57	1M	"
58	1M	"
59	470K	"
60	1K	"

Location	Rating	Description
R61	100K	Carbon Solid Resistor
62	1K	"
63	10K	"
64	33K	"
65	10K	"
66	1K	"
67	100K	"
68	1M	"
69	1K	"
70	10K	"
71	100K	"
72	1K	"
73	100K	"
74	100K	"
75	470Ω	"
76	Not used	
77	22K	"
78	100K	"
79	51K	"
80	200K	"
81	200K	"
82	100K	"
83	200K	"
84	470K	"
85	200K	"
86	200K	"
87	100K	"
88	330Ω	"
89	10K	"
90	10K	"

Location	Rating	Description
R91	10K	Carbon Solid Resistor
C1	0.01μF	Mila
2	1μF	Chemical
3	220pF	Ceramic
4	1,000pF	Mila
5	1,000pF	"
6	22μF	Chemical
7	0.01μF	Mila
8	1μF	Chemical
9	1μF	"
10	2200pF	Mila
11	1μF	Chemical
12	0.01μF	Mila
13	0.01μF	"
14	1μF	Chemical
15	0.1μF	Ceramic
16	0.47μF	Tantalum
17	220pF	Ceramic
18	3300pF	Mila
19	0.01μF	"
20	1μF	Chemical
21	1μF	"
22	3300pF	Mila
23	3300pF	"
24	1μF	Chemical
25	0.1μF	Ceramic
26	0.1μF	"

Location	Item No.	Description
Q1	2SC945	N-P-N Transistor
2	"	"
3	"	"
4	"	"

Location	Item No.	Description
D1	1S1588	Switching Diode
2	"	"
3	"	"
4	"	"
5	"	"
6	"	"
7	"	"
8	"	"
9	"	"
10	"	"
11	"	"
12	"	"
RB1	MS1038AM	10KΩ Resistor Array
2	MS2228AM	2.2KΩ Resistor Array
3	"	"
CR1	TLR103	Light Energy Diode
IC1	ULN2003AN	Darlington Transistor Array
2	ULN2003AN	"
3	CD4049CN	Hex Inverting Buffer
4	LM324N	Quadruple Operational Amplifier
5	LM324N	"
6	LM3900N	"
7	CD4013CN	Dual D Flip Flop
8	NE556N	Dual Timer
9	NE556N	"

Location	Item No.	Description
IC10	CD4070CN	Quad 2-Input E-OR Gate
11	CD4006CN	18-Stage Static Shift Resistor
12	CD4020N	14-Stage Binary Counters
13	LM324N	Quadruple Operational Amplifiers
14	CD4013CN	Dual D Flip Flop
15	CD4016CN	Quad Bilateral Switch
16	CD4050CN	Hex Non-Inverting Buffer
17	NE556N	Dual Timer

d) Sound Sub-circuit board IC location and parts list

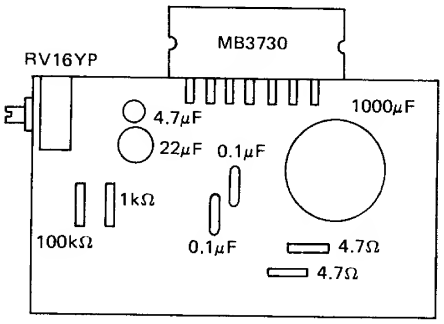

Fig. 22 Sound Sub-circuit Board

Rating	Q'ty	Description
MB3730	1	Audio Amplifier
1000μF/25V	1	Chemical Capacitor
22μF/25V	1	"
4.7μF/25V	1	"
0.1μF/25V	2	Ceramic Capacitor
1kΩ ¼W	1	Carbon Solid Registor
100kΩ ¼W	1	"
4.7Ω ¼W	2	"
RV16YP 1kΩ	1	Carbon Variable Registor

WIRING DIAGRAM (CONNECTOR)

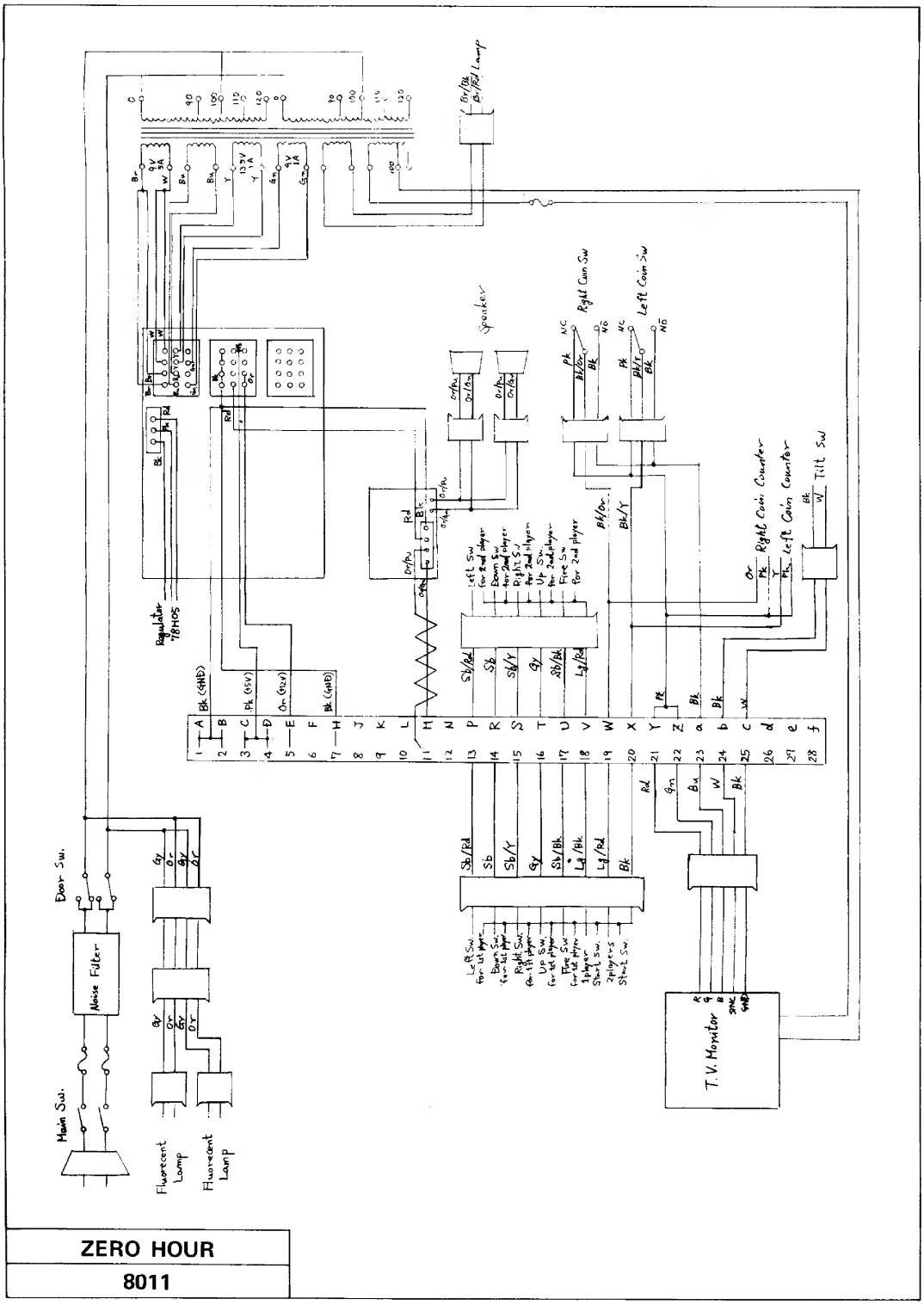

ZERO HOUR
8011

SOUND BLOCK DIAGRAM

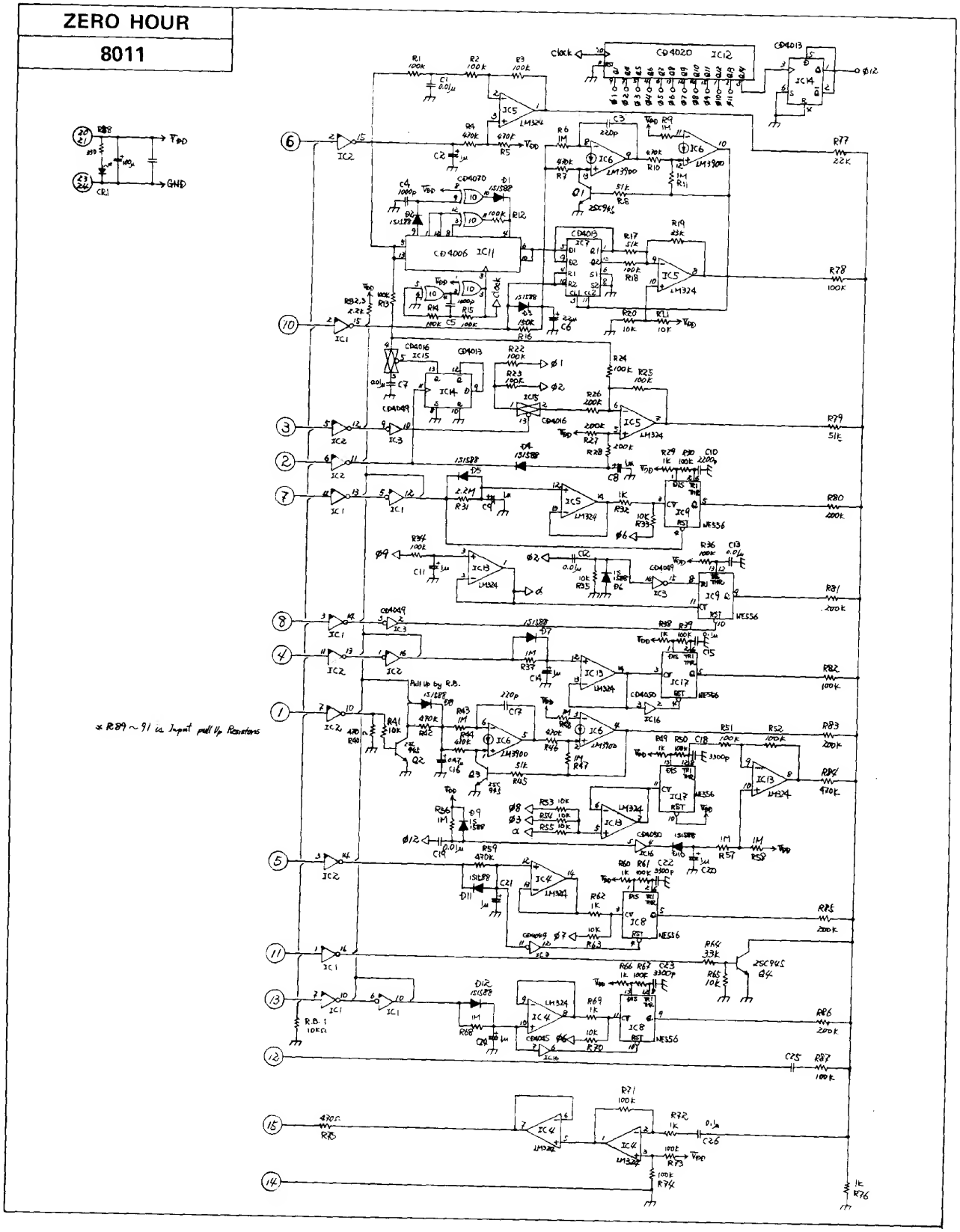

POWER SOURCE BLOCK DIAGRAM

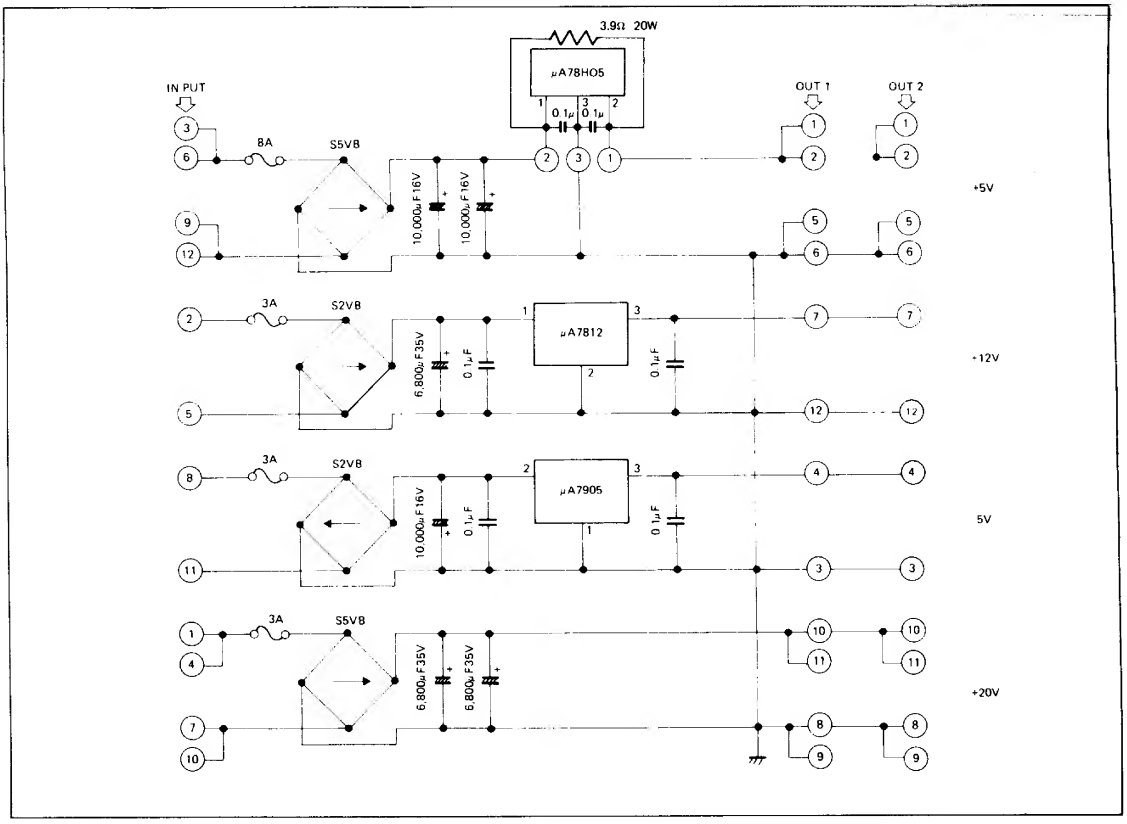

BLOCK DIAGRAM

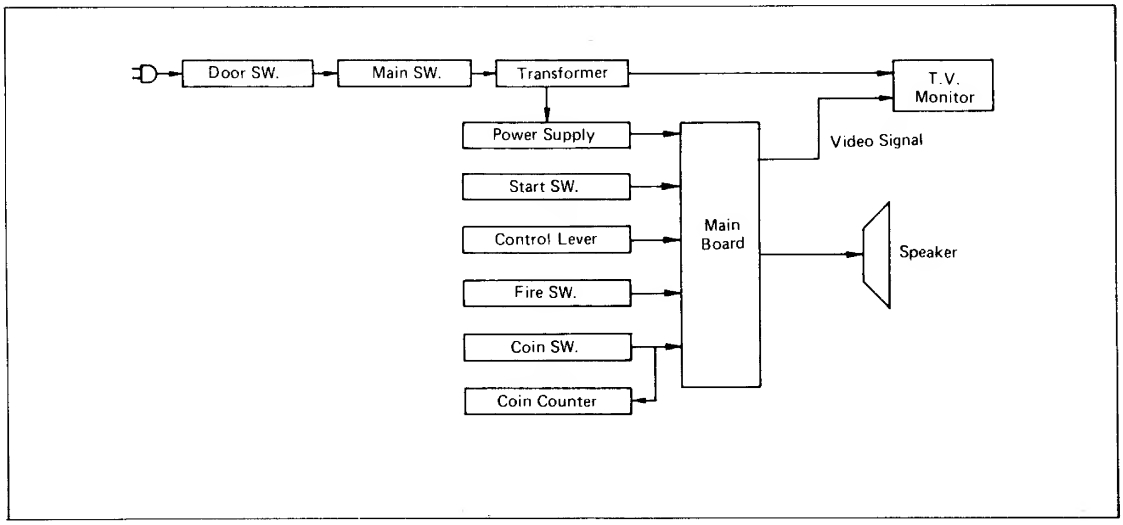

ZERO HOUR

8011

No. 1

MAIN BLOCK DIAGRAM

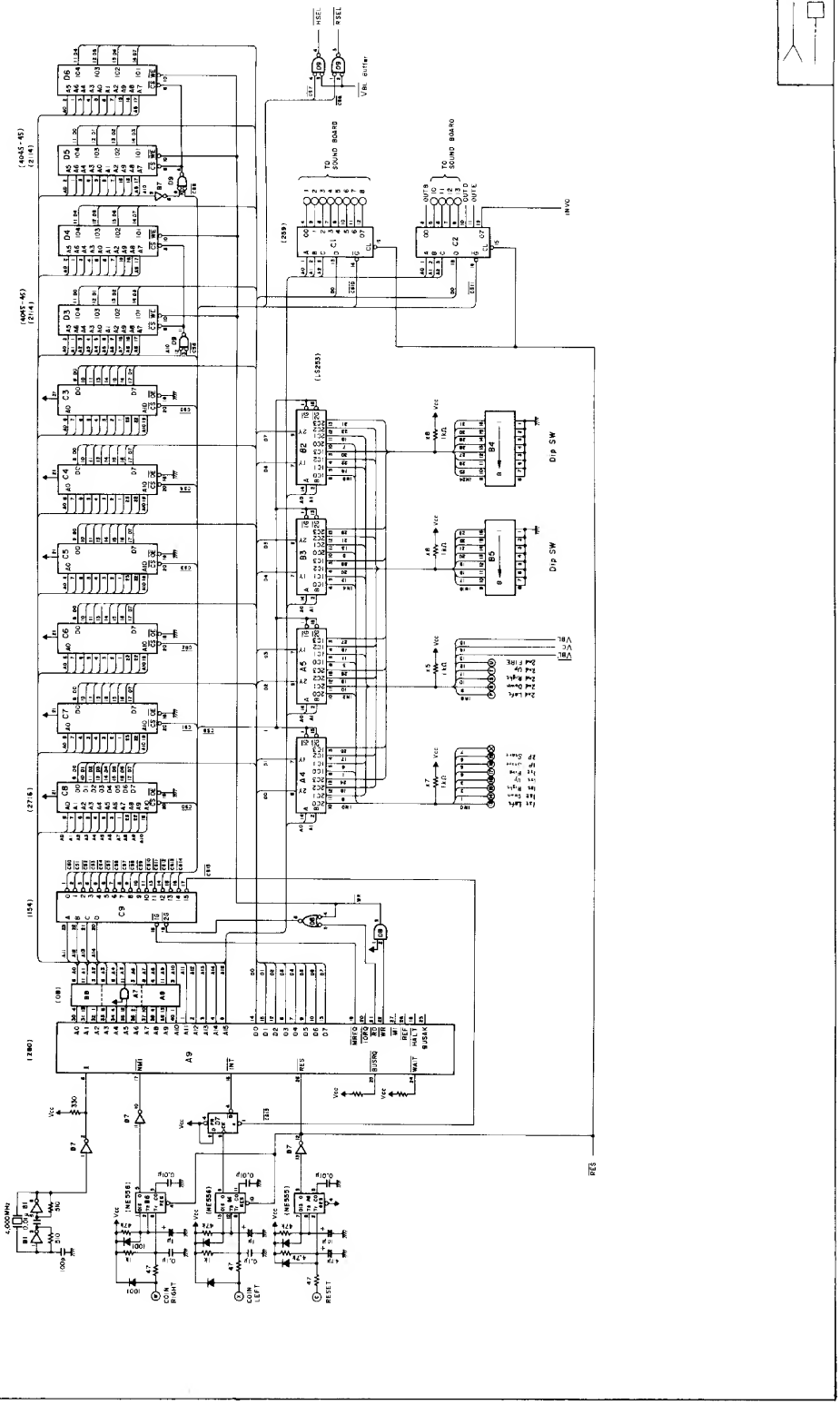

No. 2

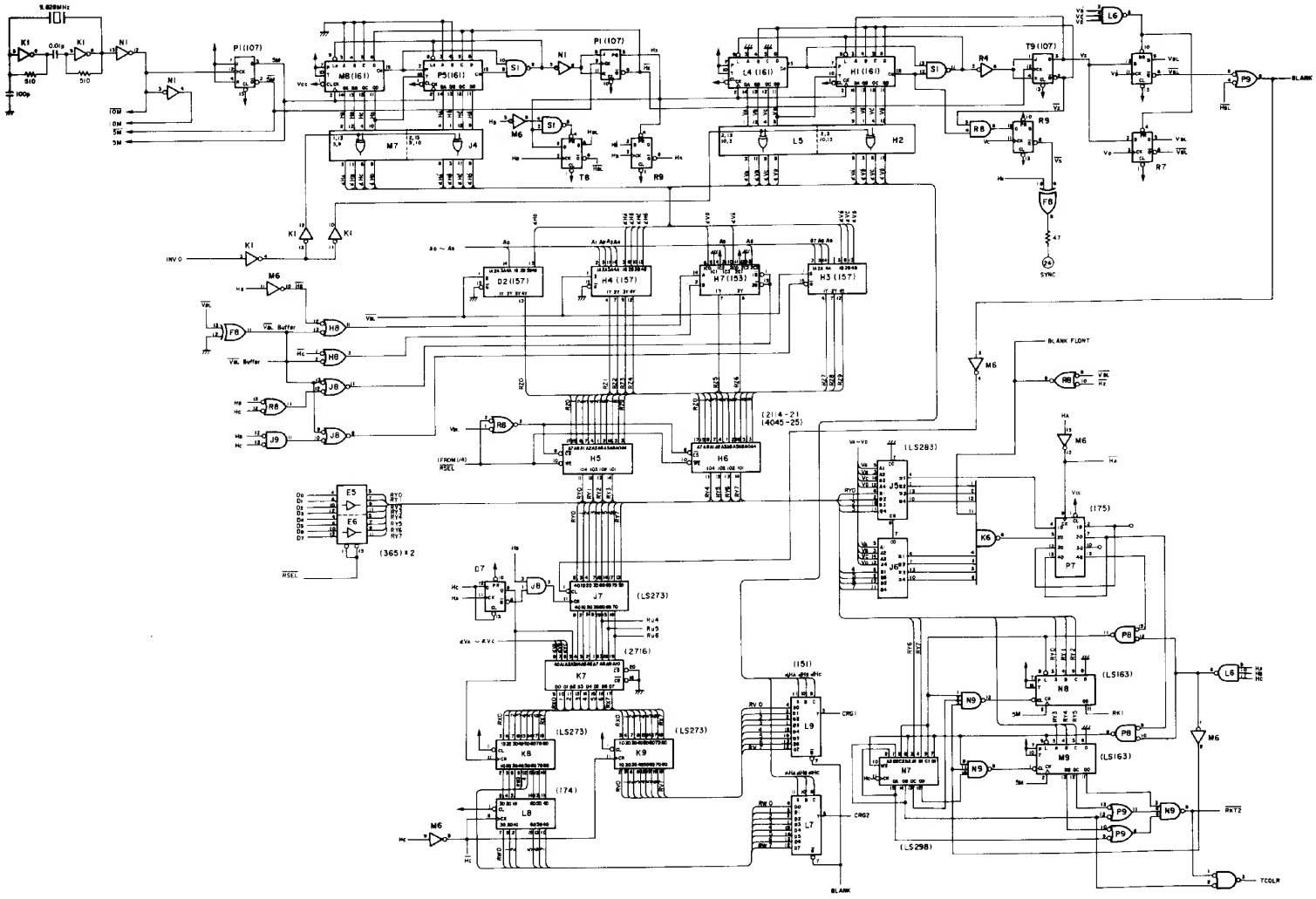

ZERO HOUR
8011

+5V
To Edge Connector

No. 3

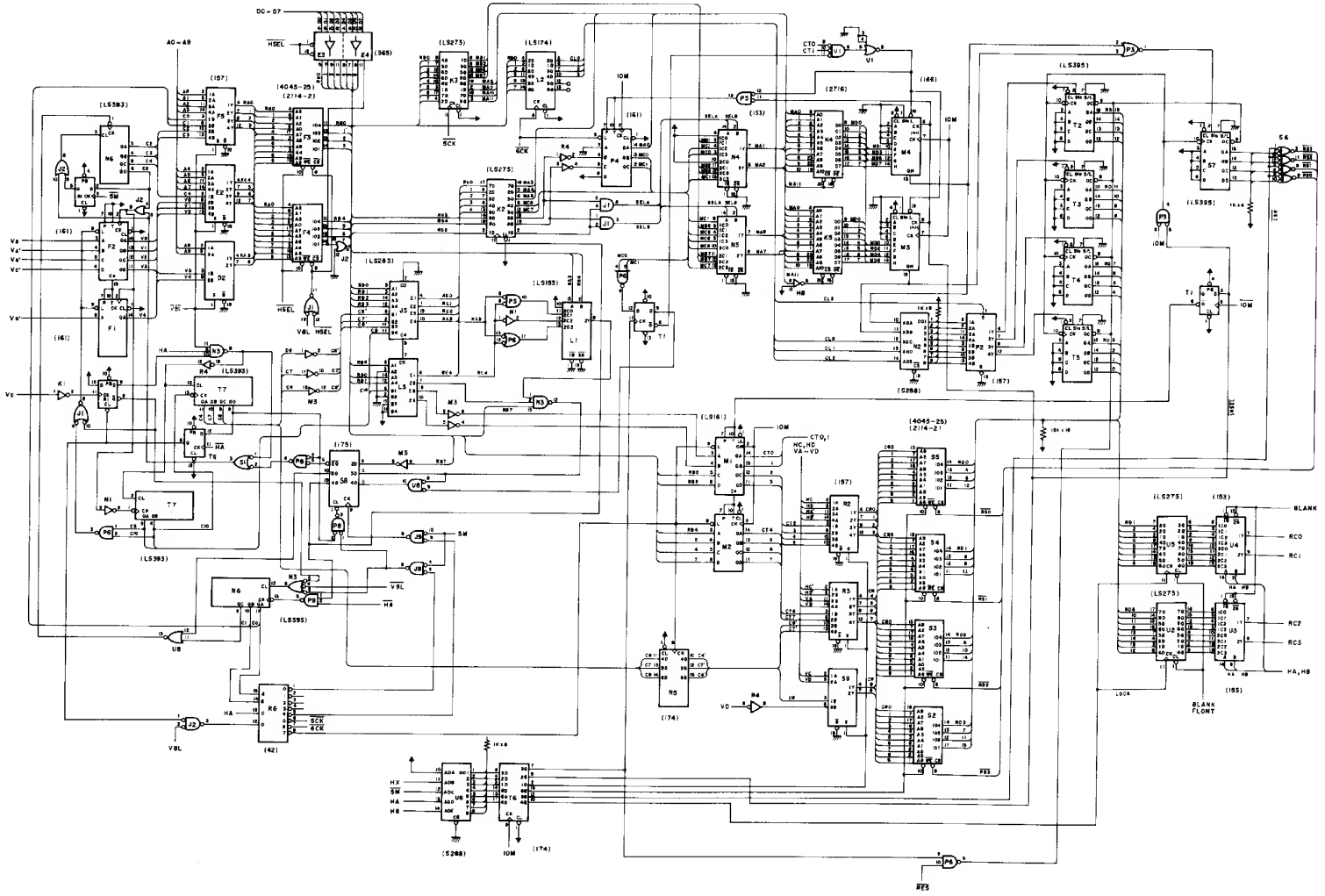

ZERO HOUR

8011

- +5V
To Edge Connector

No. 4

Sub-circuit Board

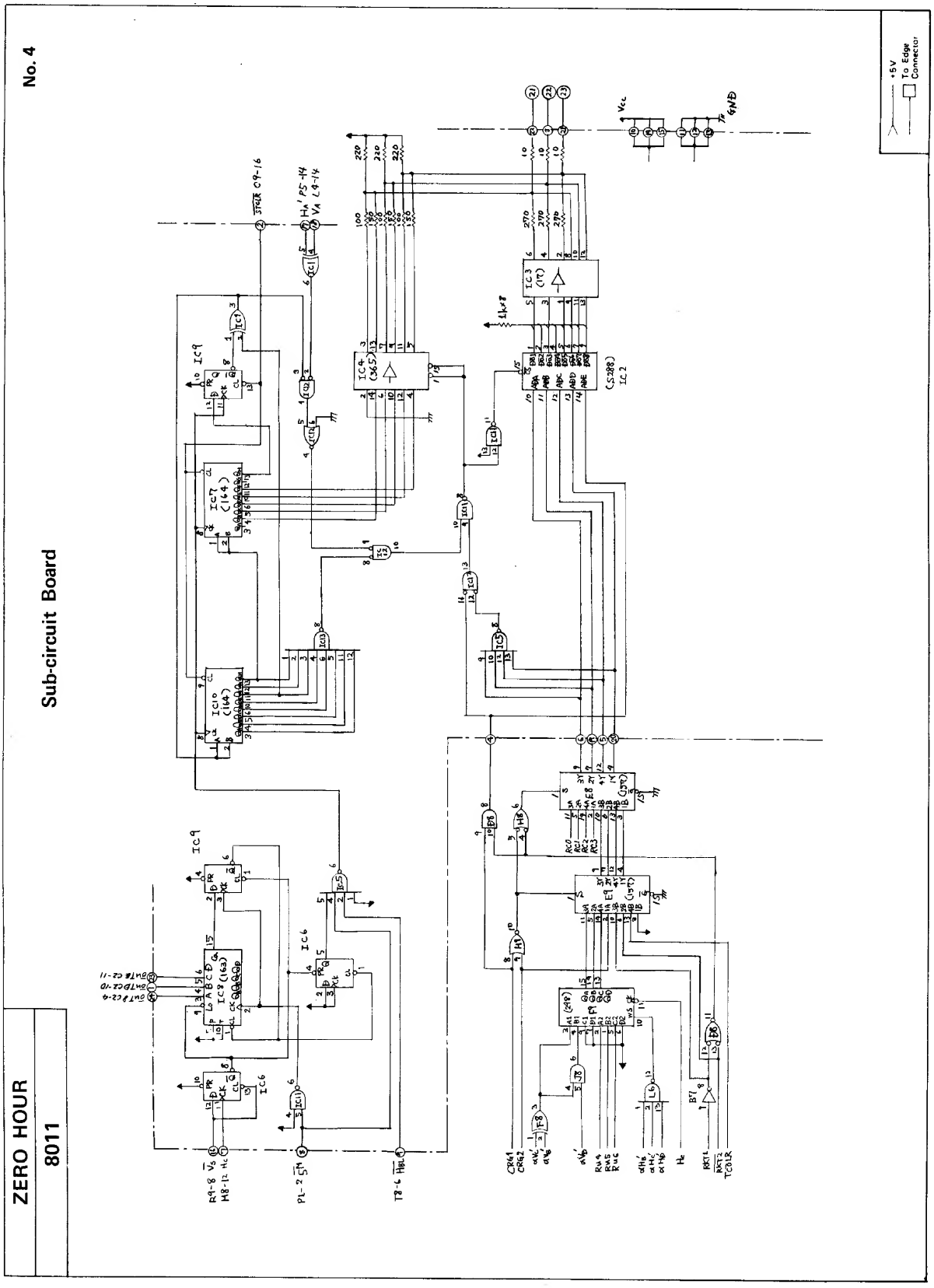

ZERO HOUR

8011